MH-270M TECHNICAL DATAS

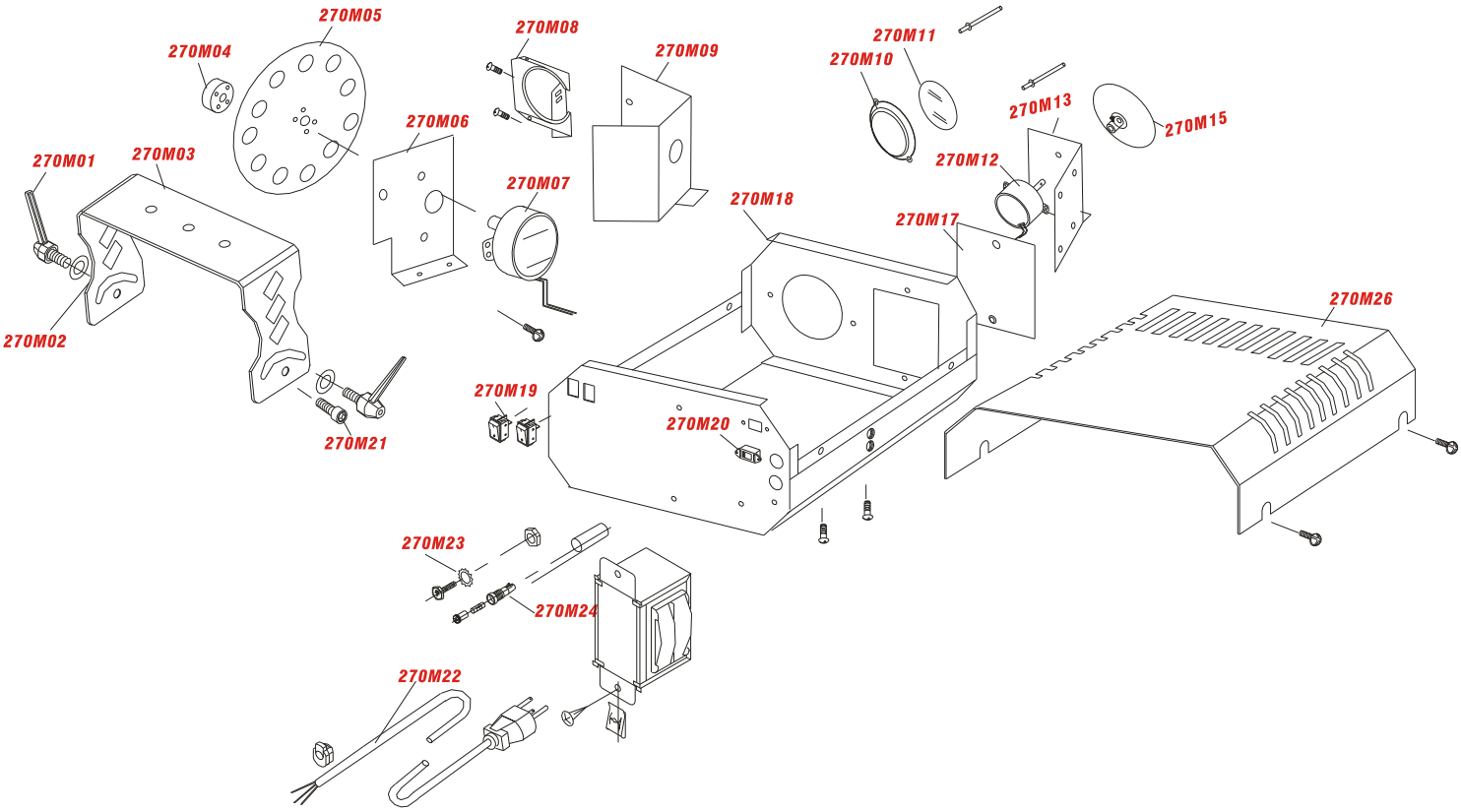

MH-270M Parts List			
Parts Code	**Parts Name**	**Parts Code**	**Parts Name**
MH270M01	Fastener	MH270M15	Reflector
MH270M02	Plastic washer	MH270M17	Plate for change lamp
MH270M03	Handle	MH270M18	Housing-base
MH270M04	Axis	MH270M19	Switch for function
MH270M05	Gobo-wheel	MH270M20	Switch for change voltage
MH270M06	Motor-base	MH270M21	Hexagonal screw
MH270M07	Motor	MH270M22	Power cord
MH270M08	Bulb-holder	MH270M23	Copper screw for ground
MH270M09	Bulb-base	MH270M24	Fuse
MH270M10	Lens-ring	MH270M25	Transformer
MH270M11	Lens	MH270M26	Housing-cover
MH270M12	Motor		
MH270M13	Motor-base		